TYMPHANY

Transducer Specification Sheet

Model Number: PLS-P830987
Product Line: Peerless Gold

Revision: Rev 1_0
Date: 9-Sep-09

Peerless

Product Description:

This 3 inch 8 ohm member of the PLS family sets a high standard, for compact full range drivers intended for applications such as television soundbars and compact music systems. Design features in this family include a damped plastic basket with venting under the spider to aid cooling of the motor, a neodymium magnet motor with copper cap to lower coil inductance, providing low distortion at low frequencies and extended high frequency response. A black anodized aluminium cone is employed on the driver, along with a black anodized aluminium dust cap coupled directly to the voice coil. Additionally, the cones come equipped with special-designed large roll rubber surrounds, which allow for a dynamic linear response to high excursion input signals.

Mechanical 2D Drawing:

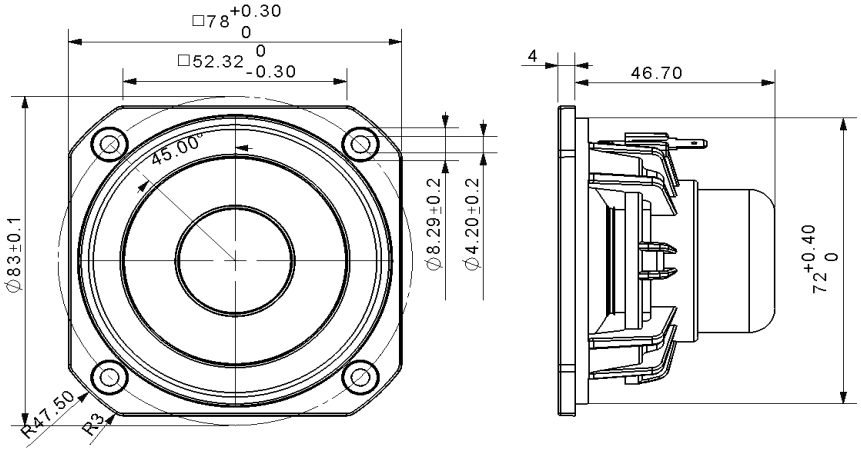

Specifications:

DC Resistance	R_{evc}	Ω	6.2	5.0%
Minimum Impedance	Z_{min}	Ω	6.6	7.5%
Voice Coil Inductance	L_e	mH	0.05	
Resonant Frequency	f_s	Hz	100	15.0%
Mechanical Q Factor	Q_{ms}	-	6.1	
Electrical Q Factor	Q_{es}	-	1.11	
Total Q Factor	Q_{ts}	-	0.94	
Ratio f_s / Q_{ts}	F	f_s / Q_{ts}	106	
Half Space Sensitivity @ 2.83V	dB@2.83V/1m	dB	82.6	+/-1.0 [1]
Sensitivity @ 1W/1m	1W/1m	dB	81.6	+/-1.0 [1]
Rated Noise Power (IEC 2685 18.1)	P	W	15	
Test Spectrum Bandwidth	100Hz - 20kHz		12 dB/Oct	

1 - Piston Band Sensitivity Tolerance

Energy Bandwidth Product	EBP	$(1/Q_{es})\cdot f_s$	90
Moving Mass	M_{ms}	g	2.52
Suspension Compliance	C_{ms}	um/N	1000.3
Effective Cone Diameter	D	cm	5.9
Effective Piston Area	S_D	cm^2	27.3
Equivalent Volume	V_{as}	L	1.05
Motor Force Factor	BL	T·m	2.98
Motor Efficiency Factor	β	$(T\cdot m^2)/\Omega$	1.43
Voice Coil Former Material	VC_{fm}	-	Aluminum
Voice Coil Inner Diameter	VC_d	mm	25.7
Gap Height	Gh	mm	4.0
Maximum Linear Excursion	X_{max}	mm	2.05
Ferrofluid Type	FF		N/A
Transducer Size	-	inch	3
Transducer Mass	-	kg	0.22

Frequency and Impedance Response:

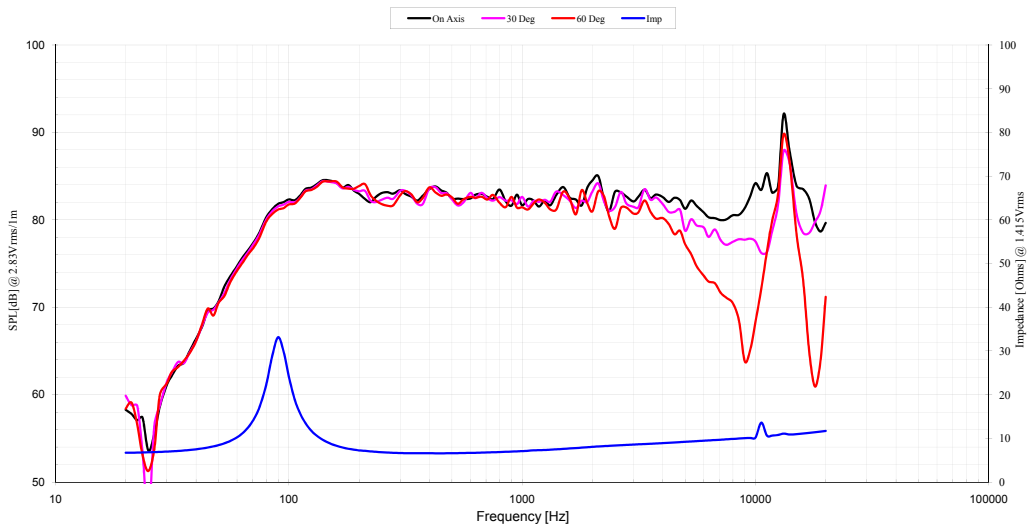

F088-0713A

Tymphany HK Ltd
Address : Room 1307-8 Dominion Centre, 43-59 Queen's Rd East, Wanchai, Hong Kong
E-mail: sales@tymphany.com